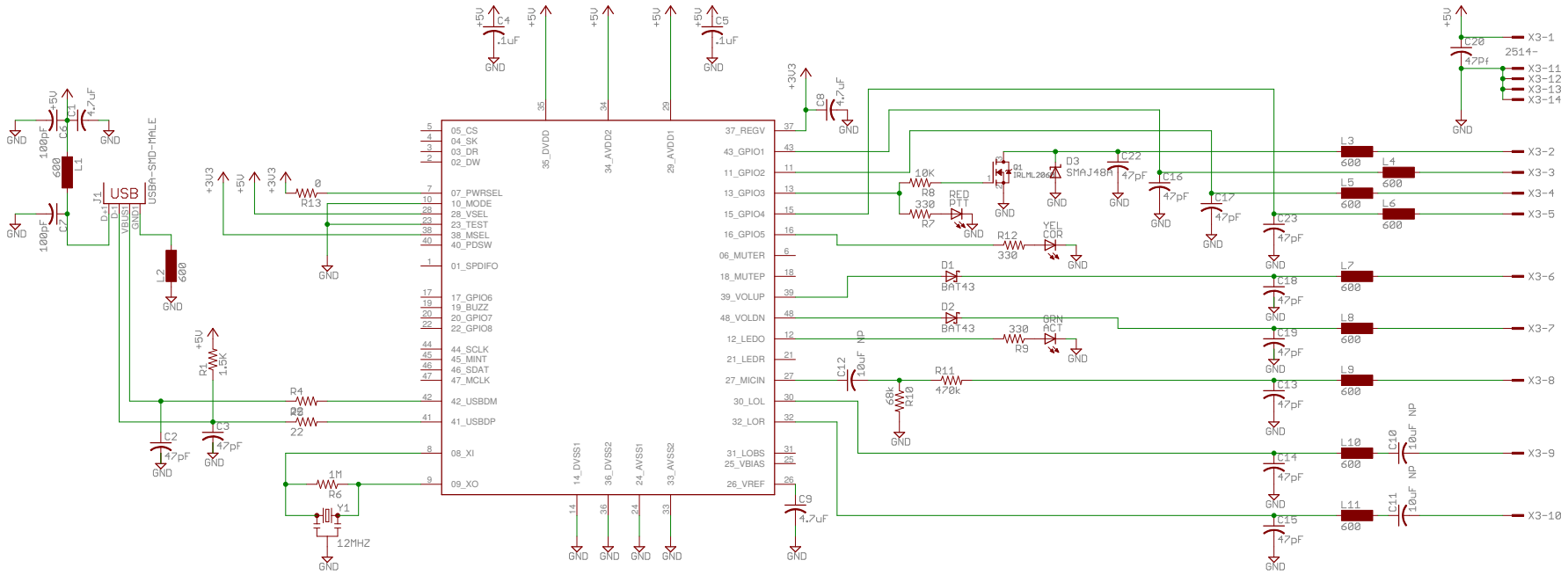

ARiUSB ALPHA-RADIO

BY: MARTIN ERNST, KD4HLV 2017

TITLE: ariusb-v1.5

Document Number:

REV: V1.5

Date: 7/10/17 10:27 PM

Sheet: 1/1