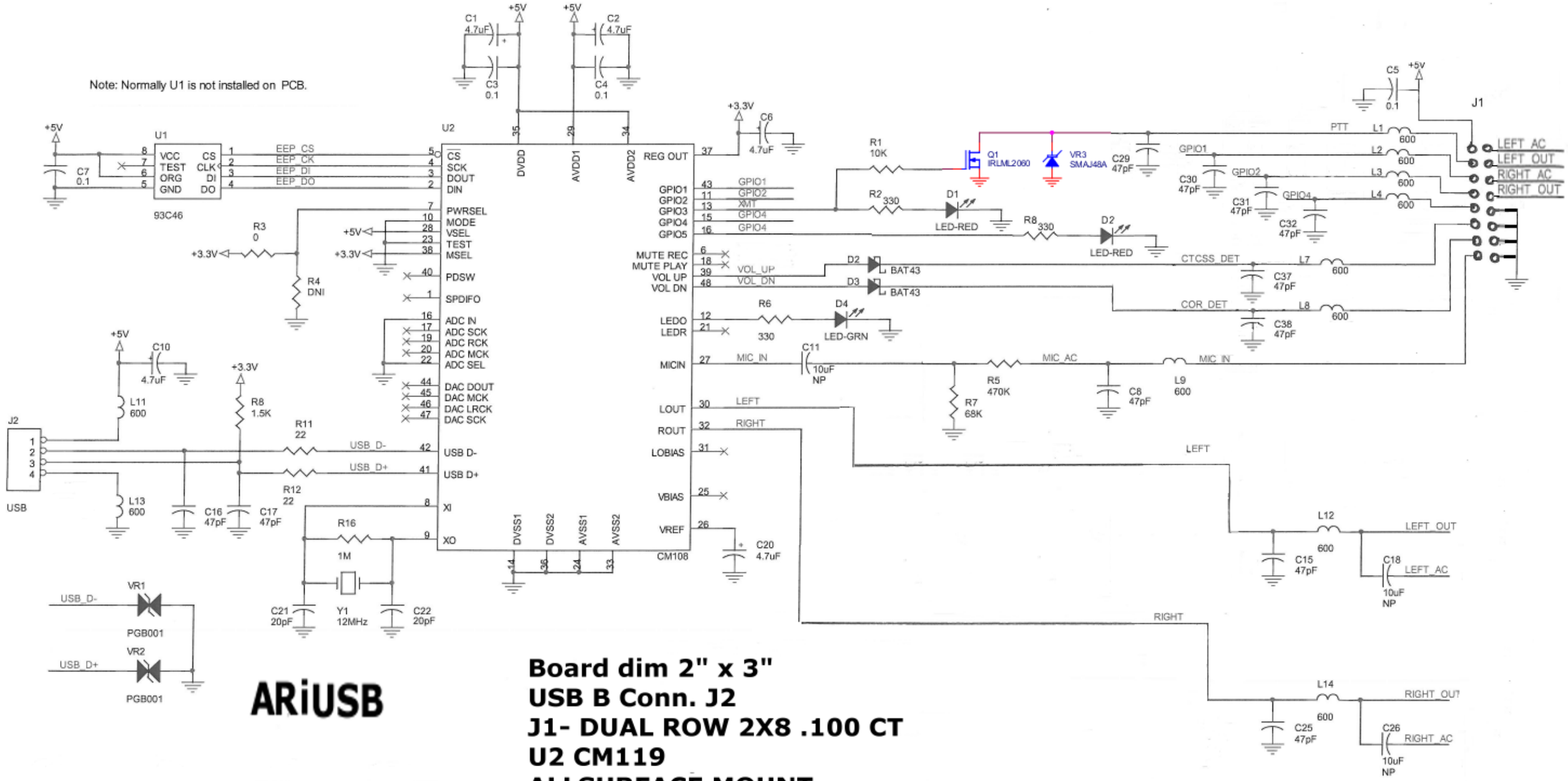

ARiUSB

Board dim 2" x 3"
USB B Conn. J2
J1- DUAL ROW 2X8 .100 CT
U2 CM119
ALLSURFACE MOUNT